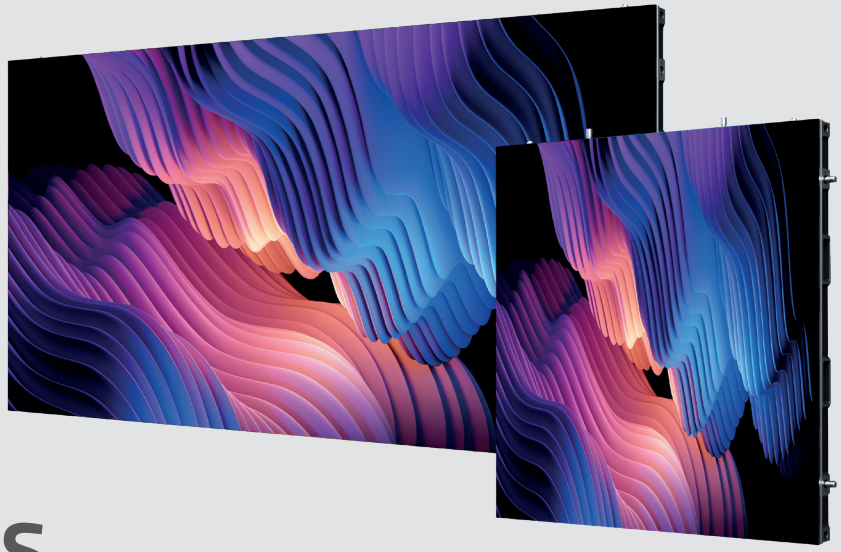

XIMGE SERIES

INDOOR LED DISPLAY

Designed for various indoor applications, this LED display delivers vivid, immersive visuals with exceptional durability and wide viewing comfort. Built-in redundancy[1] ensures uninterrupted performance, while creative cabinet[2] design enables striking 90-degree corner installations. Front-access maintenance and flexible mounting options simplify operation, accelerate deployment, and adapt effortlessly to diverse indoor environments.

Highlights

Customizable Brightness, Versatile Indoor Applications

Customizable brightness up to 3,000 nits allows the XIMGE series to adapt seamlessly to a wide range of indoor environments. This flexibility ensures optimal visual comfort under different ambient lighting conditions, delivering clear, consistent image quality.

Dual Redundancy, Uninterrupted Operation[1]

The XIMGE features dual backup design for both receiving cards and power supplies, ensuring uninterrupted operation. It significantly reduces downtime risk, which is ideal for mission-critical indoor applications.

45° Beveled Edges, Creative Installation[2]

Featuring precisely beveled 45-degree edges on left and right modules, enabling perfect 90-degree corner joins, the 500×500mm cabinet supports cube and corner installations, empowering eye-catching and immersive visuals.

Reliable Front Maintenance

Full front maintenance with hard-connection design delivers stable and highly reliable solution. Modules can be serviced quickly from the front, saving space, reducing maintenance time and labor costs.

Extreme Installation Flexibility

Flexible installation methods allow wall-mounting, floor-standing, or easy suspension using a customized hanging structure. This adaptability simplifies installation, shortens project timelines, and enables the display to fit effortlessly into any indoor environments.

Energy Efficiency

The display delivers outstanding power efficiency, achieving up to 16% higher energy efficiency than the previous generation. This helps reduce power consumption and supports energy-efficient operation in long-term indoor applications

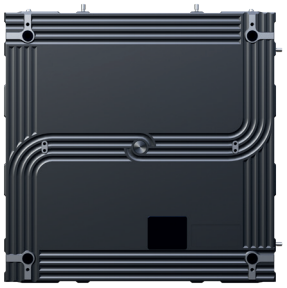

1. Only applicable for the 1,000 x 500 mm cabinet.
2. Only applicable for the 500 x 500 mm cabinet.

Specifications

XIMGE Series

Model	XIM019GE	XIM026GE	XIM029GE	XIM039GE
Pixel Pitch	1.9 mm	2.6 mm	2.9 mm	3.9 mm
Pixel Configuration	SMD1212	SMD1515	SMD2121	SMD2121
Module Resolution (W x H)	128 x 128	96 x 96	84 x 84	64 x 64
Module Dimension (W x H)	250 x 250 mm			
Cabinet Resolution (W x H)	512 x 256 256 x 256	384 x 192 192 x 192	336 x 168 168 x 168	256 x 128 128 x 128
Cabinet Dimension (W x H x D)	1,000 x 500 x 33.4 mm / 500 x 500 x 33.4 mm Customizable (based on 250 mm modules)			
No. of Modules per Cabinet (W x H)	4 x 2 / 2 x 2			
Cabinet Weight	10 kg / 5 kg			
Cabinet materials	Die-cast Aluminum			
Brightness (typ.)	800 nits			
Brightness (customizable)	2,500 nits	3,000 nits	3,000 nits	3,000 nits
Contrast Ratio	8,000:1@10lux			
Visual Viewing Angle (H x V)	160° x 140°			
Bit Depth	14 bit (14~16 bit Customizable)			
Color Temperature	8,000K ± 500K			
Video Frame Rate	60 Hz			
Max Power Consumption	500 (W/m²) @800nits 600 (W/m²) @2,500nits	500 (W/m²) @800nits 600 (W/m²) @3,000nits	500 (W/m²) @800nits 600 (W/m²) @3,000nits	500 (W/m²) @800nits 600 (W/m²) @3,000nits
Avg Power Consumption	170 (W/m²) @800nits 180 (W/m²) @2,500nits	170 (W/m²) @800nits 180 (W/m²) @3,000nits	170 (W/m²) @800nits 180 (W/m²) @3,000nits	170 (W/m²) @800nits 180 (W/m²) @3,000nits
Max Heat Generation	1,706 (BTU/m²) @800nits 2,047 (BTU/m²) @2,500nits	1,706 (BTU/m²) @800nits 2,047 (BTU/m²) @3,000nits	1,706 (BTU/m²) @800nits 2,047 (BTU/m²) @3,000nits	1,706 (BTU/m²) @800nits 2,047 (BTU/m²) @3,000nits
Avg Heat Generation	580 (BTU/m²) @800nits 614 (BTU/m²) @2,500nits	580 (BTU/m²) @800nits 614 (BTU/m²) @3,000nits	580 (BTU/m²) @800nits 614 (BTU/m²) @3,000nits	580 (BTU/m²) @800nits 614 (BTU/m²) @3,000nits
Power Supply	100-240 V AC			
Refresh Rate	3,840 Hz (7,680 Hz Customizable)			
Operating Temp / Humidity	-10~40°C / 10~90% RH			
Storage Temp / Humdity	-20~40°C / 10~65% RH			
IP Rating	IP20			
Lifetime	100,000 Hrs			
Maintenance	Front Access			

* According to the current Hisense test environment

** Product specifications may vary per region, and specifications are subject to change. This material may include corporate names and trademarks of third parties which are the properties of the third parties respectively.

Display Dimensions

500 x 500 mm

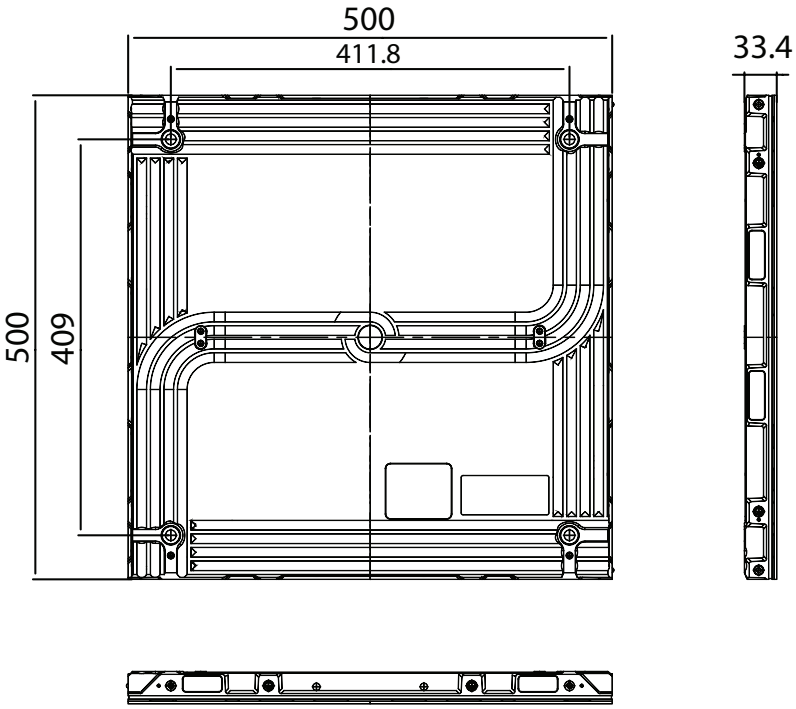

1,000 x 500 mm

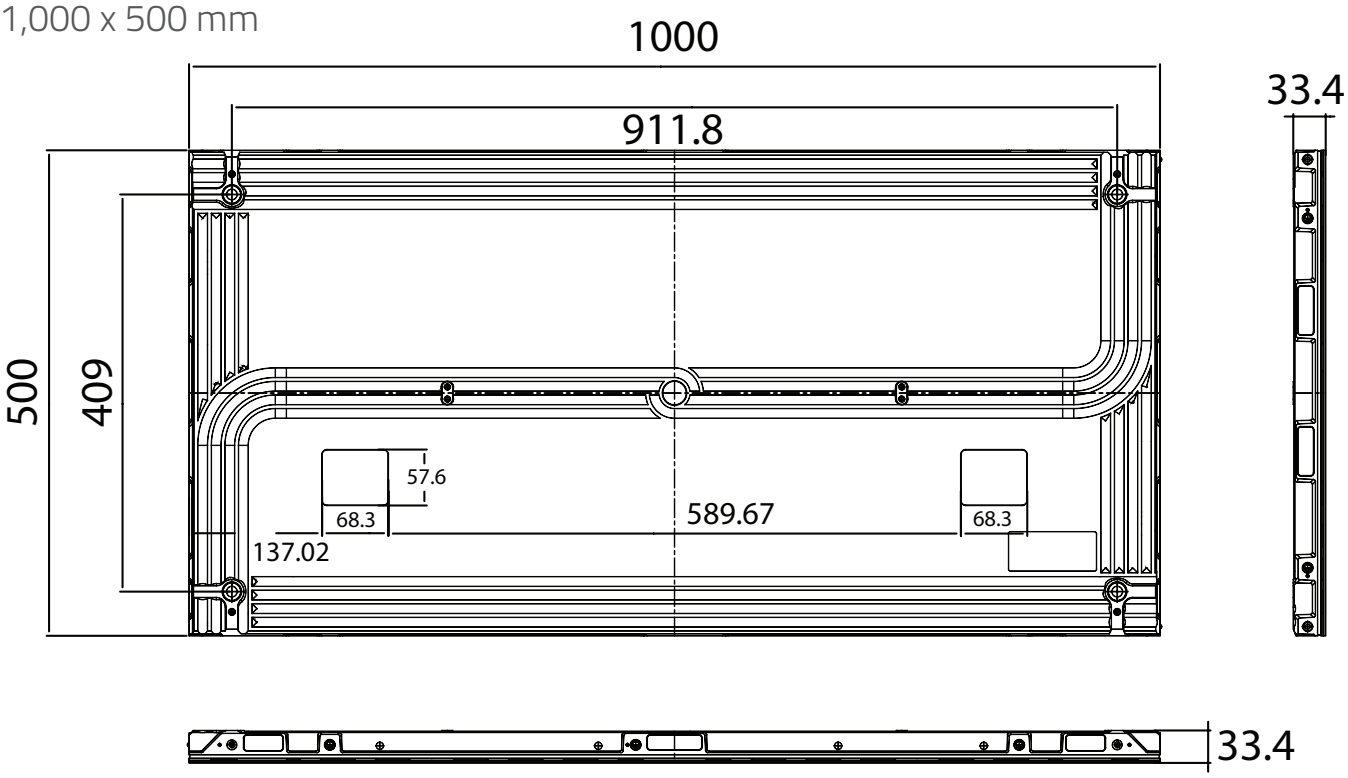

* According to the current Hisense test environment

** Product specifications may vary per region, and specifications are subject to change. This material may include corporate names and trademarks of third parties which are the properties of the third parties respectively.