100DM66GE

100" 4K UHD DIGITAL SIGNAGE DISPLAY

Hisense digital signage solutions are ideal for high-traffic retail and corporate installations. With 500-nit brightness, they ensure your digital content stands out and captures attention. Designed for reliable 24/7 operation, the Hisense DM Series keeps your content on display at all times, making it perfect for mission-critical environments. Powered by Android 14 and integrated VisionInfo platform, the DM Series enables smart, efficient and easy-to-control content distribution and remote management. Ultimately, the DM66GE delivers a seamless, high-impact digital signage solution, providing a future-proof platform to captivate audiences and optimise your digital communication strategy.

Highlights

Captivating 4K Visuals

With 85% NTSC color gamut and local dimming technology, the display unlocks breathtakingly accurate hues and cinematic immersion—transforming ultra HD into a visual journey.

500 nits Vivid Displays

With 500 nits brightness, the display panels deliver vivid imagery, ensuring vibrant, accurate colors day or night—ideal for high-traffic retail and outdoor advertising environments.

Anti-glare with 25% haze

The 25% haze panels effectively minimize reflections while maintaining optimal image quality, make sure the critical information are always visible. Additionally, the anti-glare coatings enhance the perceived contrast ratio, delivering a sharper and more vibrant visual experience.

Landscape and Portrait

The display seamlessly adapts to both portrait and landscape modes, enabling flexible installations in retail spaces, museums, stadiums, and corporate environments while maintaining 4K visual consistency across orientations.

Android 14

Powered by smart OS, the DM66GE series offers flexible app integration, seamless OTA updates, and user-friendly controls. Its open ecosystem enables third-party app installations, ensuring smart, efficient, and scalable digital signage solutions.

Wireless Screen Sharing

Featuring Hisense's enterprise-grade wireless screen sharing platform, the DM Series delivers instant, low-latency, cross-platform casting. Optimized for dynamic workflows—from boardrooms to retail stores—it enhances workplace connectivity through secure, seamless synchronization.

Conformal Coating

A protective conformal coating shields electronic components from moisture, dust, chemicals and mechanical abrasion, ensuring enhanced reliability and long-term performance in demanding environments.

Built-in VisionInfo

VisionInfo delivers end-to-end cloud-based content management, scheduling, remote updates, and centralized device control. This intuitive platform enables seamless device management and real-time monitoring from any location.

Specifications

Digital Display Panel

Backlight Type	DLED
Type	VA
Size	100"
Resolution	3,840 x 2,160
Refresh rate	60 Hz
Color Depth	1.07B (10bit)
Brightness(Typ.)	500 nits
Contrast Ratio(Typ.)	6,000:1
Response Time(Typ.)	6.5 ms
Viewing Angle(Min.)	178°/178°
Color Gamut(Typ.)	85% NTSC
Haze	25%
Orientation	Landscape & Portrait
LED Lifetime	up to 50,000 hrs
Operation Hours	7Day x 24Hour

System

Operating System	Android 14
Processor CPU	ARM Cortex-A73 Quad core
Processor GPU	Mali-G57 MC1
Memory	4G DDR4
Storage	32G EMMC

Connectivity

WI-FI	WiFi 6,2.4/5.0GHz dual, 802.11a/b/g/n/ac/ax
Bluetooth	BT5.4
Input	HDMI x3 (HDMI2.0x2+HDMI2.1x1) USB (Type-C) x1 (PD65W) USB (Type-A) x2 (USB2.0x1+USB3.2 Gen1x1) IR (2.5mm) x1 LAN (RJ45) x1 RS232 (3.5mm) x1
Output	HDMI x1 (HDMI2.0x1) Audio (3.5mm) x1

Physical

Bezel Color	Black
Set Dimension(W×H×D)	2,234.6 x 1,285.6 x 86.5 mm 88.0 x 50.6 x 3.4 inch
Bezel width(T/L/R/B)	13.2mm(T/L/R), 19mm(B)
Net Weight	59.6 kg / 131.4 lbs
Packing Dimension (W×H×D)	2,496 x 1,500 x 325 mm 98.3 x 59.0 x 12.8 inch
Gross Weight	73.5 kg / 162.1 lbs
VESA Mount	Landscape: 600 x 600 mm, 4-M8 Screw Portrait: 600 x 1,000 mm, 4-M8 screw

Power

Power Supply	AC 100~240V, 50/60Hz
Power Consumption (Typ.)	257 W
Power Consumption (Max.)	510 W
Standby Consumption	<0.5W (Standby Mode)

Speaker

Built in speaker	15W x 2

Environment

Operating Temperature	0°~40°C
Operating Humidity	10%~80% Non-Condensing

What's in the box

Standard	Quick Setup Guide
	Warranty Card
	Power Cord
	Remote Controller & Battery (AAA)
	RS232 Converter Cable

Certification

Standard Certification	CB / CE / cTUVus / FCC / RCM / ERP / CEC / South Africa Energy Efficiency
Safety	62368-1
Enviroment	Energy Star 8.0
EMC	Class B
IP Rating	IP5X (front)

Dimensions

100" 2,234.6 x 1,285.6 x 86.5mm / 88.0 x 50.6 x 3.4 inch
59kg / 130.1lbs

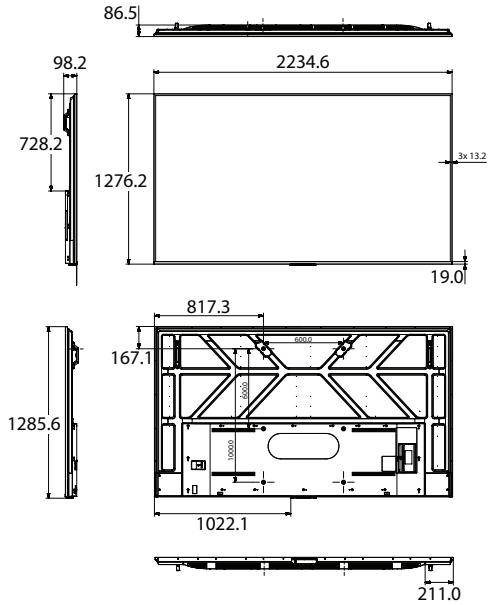

Product specifications may vary per region, and specifications are subject to change. This material may include corporate names and trademarks of third parties which are the properties of the third parties respectively.